運輸箱連桌面板
Hard Case with table top

包圍運輸箱的畫面印製～
做圖尺寸：1840(w) x 795mm(h)

Inkjet printing wrap around the plastic box ～
Graphic size : 1840 x 795mm(h)
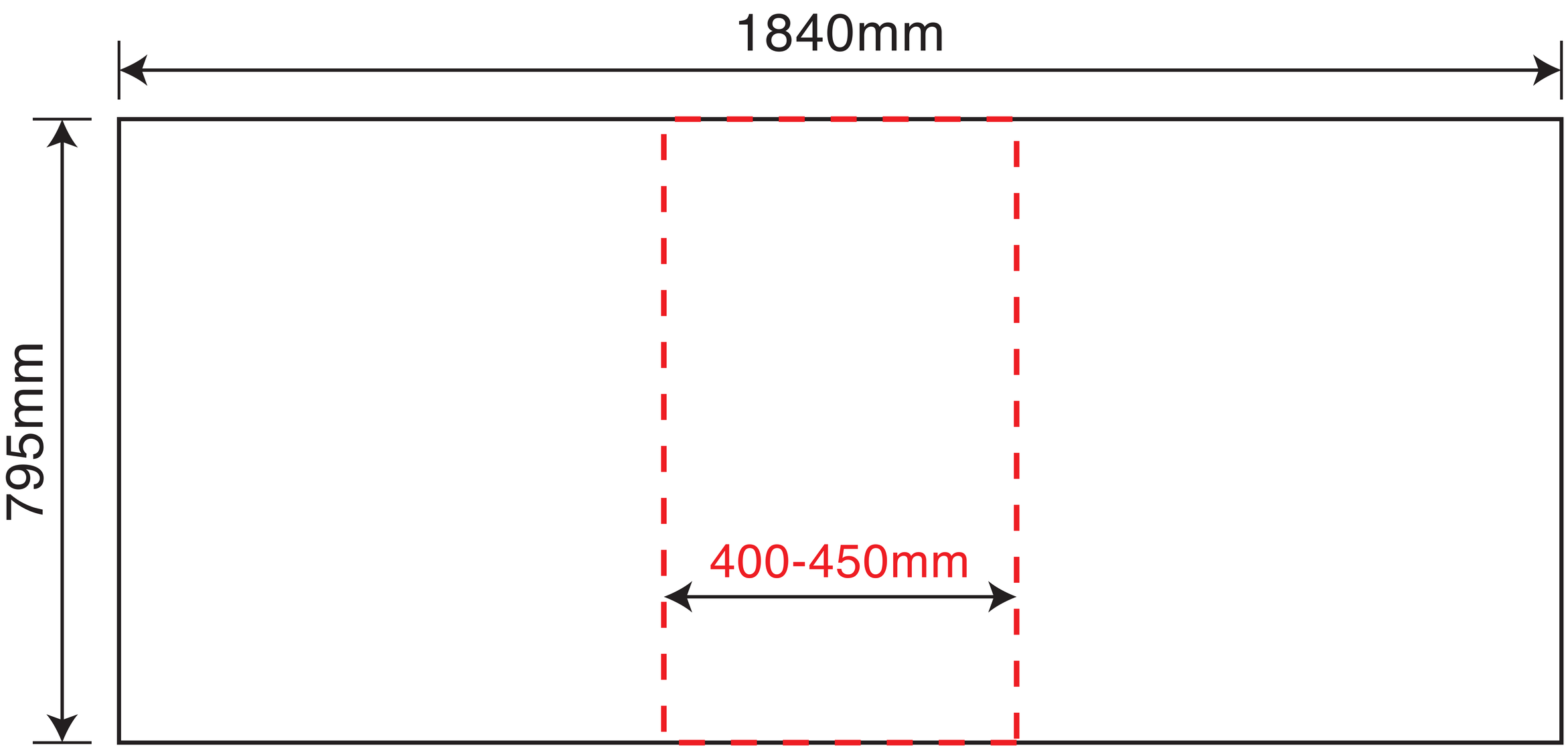
建議商標最好放在這範圍內及偏高一點
Main image are recommended to place inside the dotted line and put a little bit higher